All materials

A	B	C	D	E	F
 X12	 X4	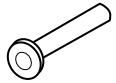 X4	 X4	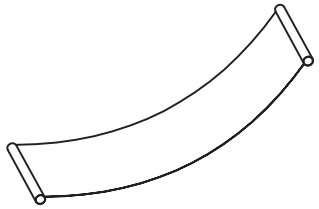 X1	 X2

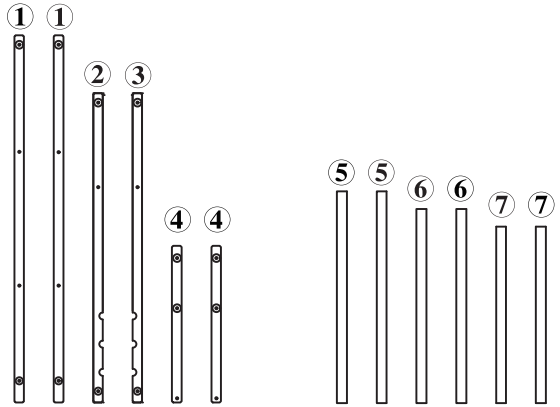

Step 1

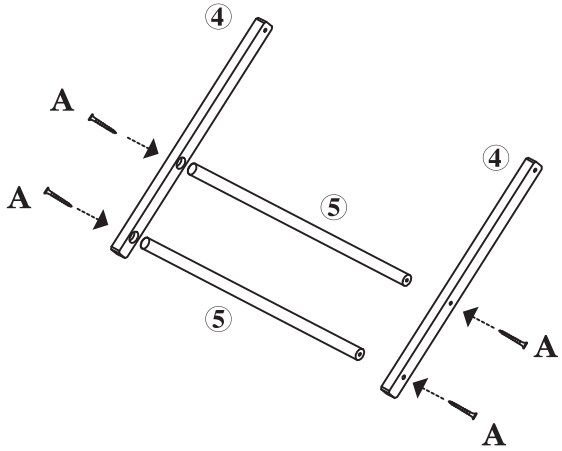

A*4
⑤*2
④*2

Step 2

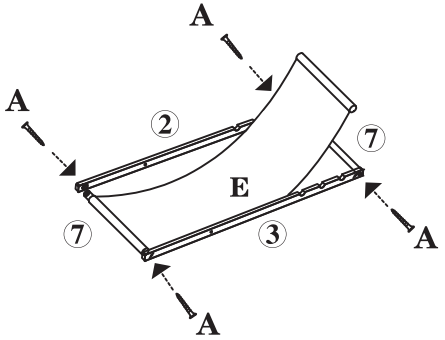

A*4
E*1
②*1
③*1
⑦*2

Step 3

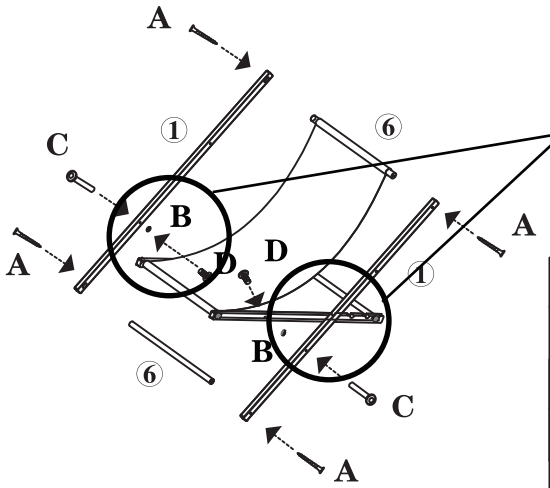

A*4
B*2
C*2
D*2
①*2
⑥*2

Step 4

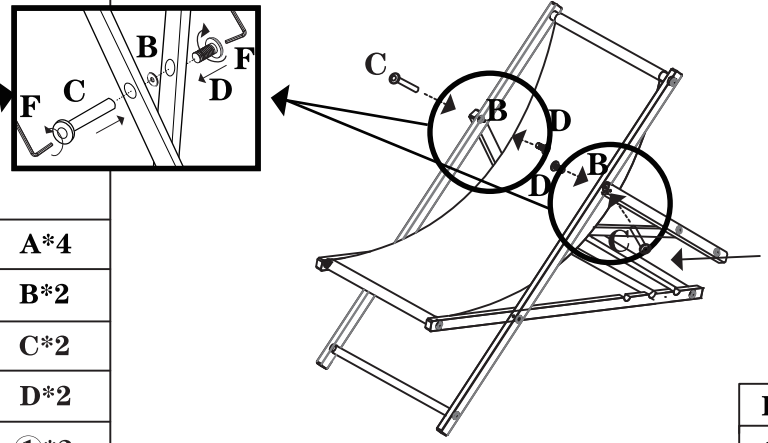

B*2
C*2
D*2

Step 5

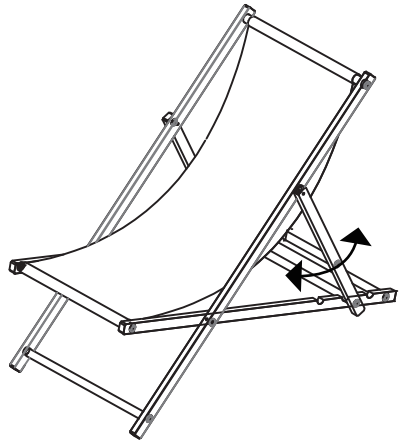

Instruction

Use power screwdriver to **start** screw assembly, hand tighten all screws.
Please make sure you have all necessary parts before beginning assembly.



1PC

1

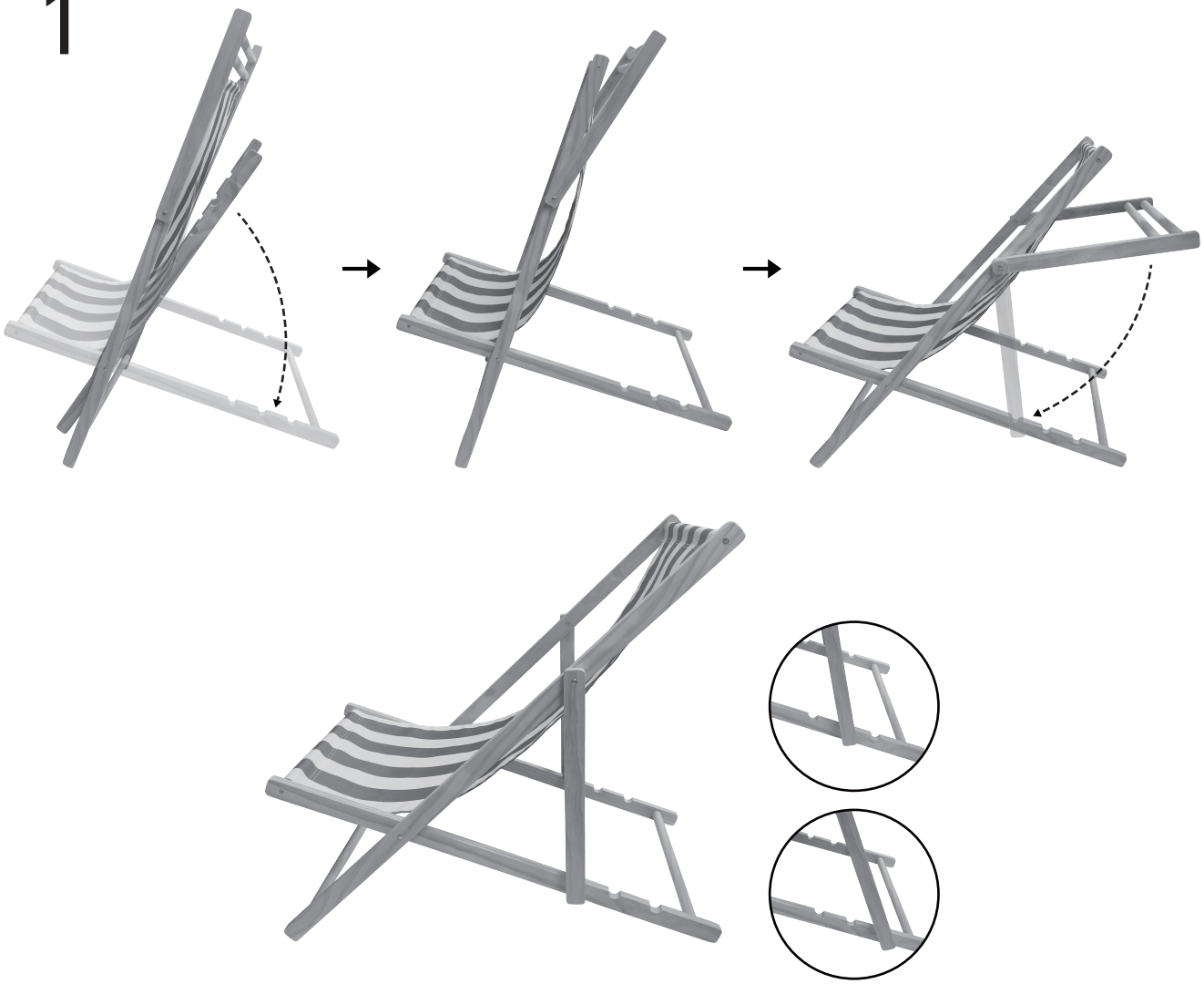

The back of the chair can be adjusted in three gears.