INSTRUCTION

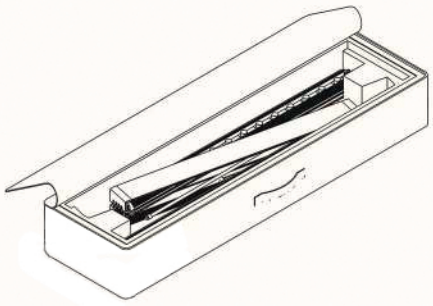

Open the package,the Light box is ready assembled in one piece 1



Twist feet with 90 degree 2

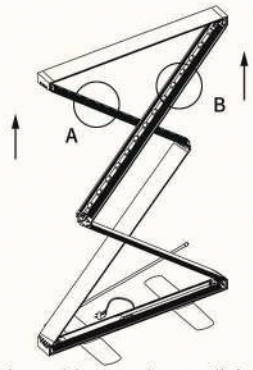

Hold the position A and B to pull the frame up until it the frame is fully streched 3

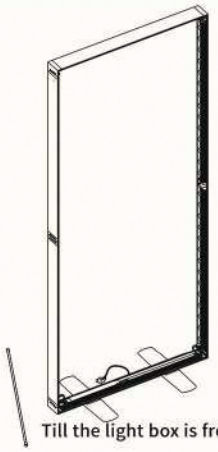

Till the light box is free standing 4

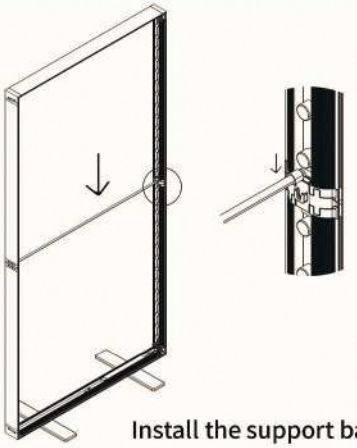

Install the support bar 5

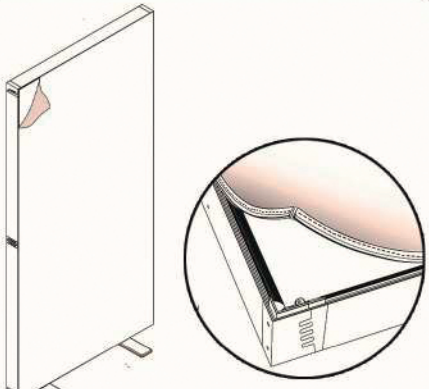

Insert the Fabric 6

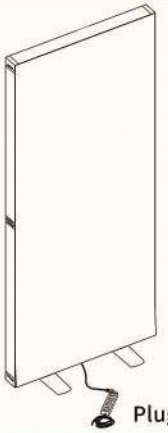

Plug in to light it up 7

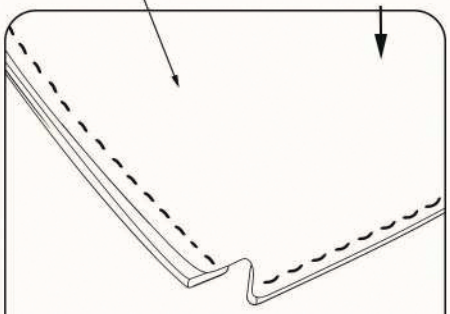

Fabric on top and beding of the silicone downwards

Note : Steps to put back in the bag

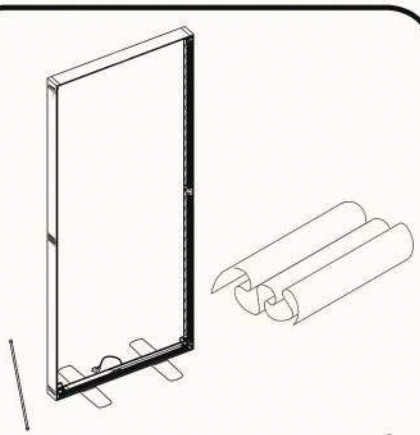

Pull out the plug and graphics 1

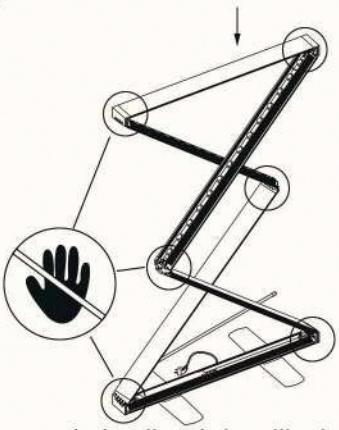

Use the handle to help pulling it down 2



Put it into the packages after fully folded 3